Current part is item (9) on diagram. Available at www.oshkoshequipment.com

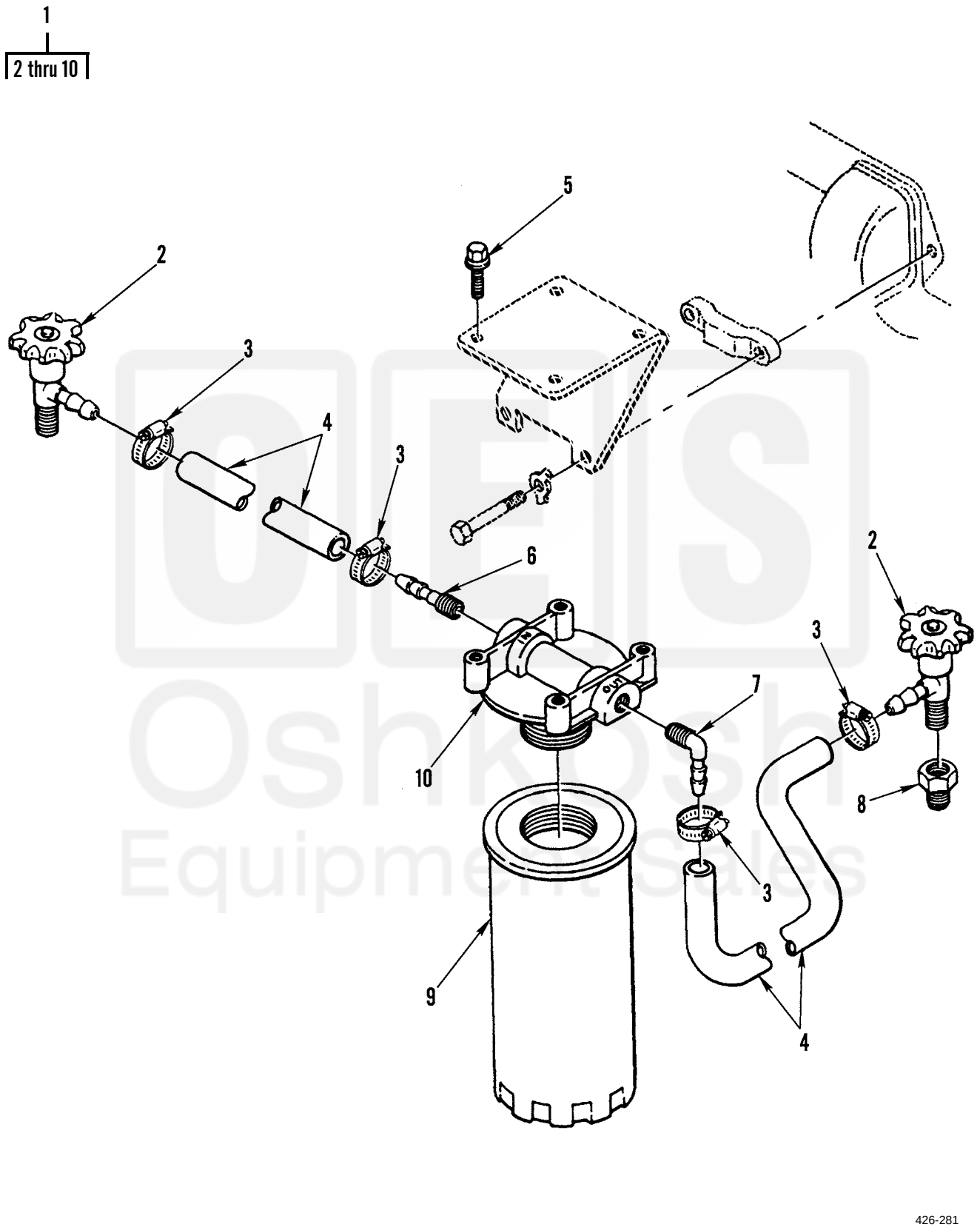

Figure 29. Coolant Filter and Kit

Current part is item (9) on diagram. Available at www.oshkoshequipment.com

Current part is item (9) on diagram. Available at www.oshkoshequipment.com

(1) ITEM NO	(2) SMR CODE	(3) NSN	(4) CAGEC	(5) PART NUMBER	(6) DESCRIPTION AND USABLE ON CODES(UOC)	(7) QTY
					GROUP 0503 WATER MANIFOLD, HEADERS, THERMOSTATS, AND HOUSING GASKET	
					FIG. 29 COOLANT FILTER AND KIT	
1	PAOZZ	2940011841877	34623	5739124	FILTER,FLUID INCLUDES MTG BRACKET, MTG HARDWARE, AND FILTER ELEMENT....	1
2	PAOZZ	4820010456080	15434	179901	.VALVE,ANGLE BIG CAM III.....	1
2	PAOZZ	4820012277141	34623	5730765	.VALVE,ANGLE BIG CAM I.....	1
3	XDOZZ		05411	B28H	.CLAMP,HOSE BIG CAM I.....	4
3	PAOZZ	4730011464016	15434	179904	.CLAMP,HOSE BIG CAM III.....	1
4	PAOZZ	4720001609649	15434	179912	.HOSE,NONMETALLIC BIG CAM III.....	1
4	XAOZZ		34623	5710454	.HOSE BIG CAM I.....	1
5	PAOZZ	5305010886019	34623	MA25-21056	.SCREW,ASSEMBLED WAS.....	4
6	PAOZZ	4730009549510	15434	179902	.COUPLING HALF,QUICK BIG CAM III...	1
6	PAOZZ	4730009549510	34623	5730775	.COUPLING HALF,QUICK BIG CAM I.....	1
7	PAOZZ	4730010453083	15434	179903	.ELBOW,PIPE TO HOSE BIG CAM III....	1
7	PAOZZ	4730011650749	15434	70470	.ELBOW,TUBE BIG CAM I.....	2
8	PAOZZ	4730012287710	34623	5730770	.ADAPTER,STRAIGHT,PI.....	1
9	PAOZZ	4330002744712	10988	A77544	.FILTER ELEMENT,FLUI.....	1
10	PAOZZ	4330010203666	33457	204163	.HEAD,FLUID FILTER BIG CAM III.....	1
10	PFOZZ	2940012277445	34623	5730769	.HEAD,FLUID FILTER BIG CAM I.....	1

END OF FIGURE

Current part is item (9) on diagram. Available at www.oshkoshequipment.com